DRAWING MADE IN THIRD ANGLE PROJECTION

LOC AJ | DIST 16

P	F	REVISIONS			
		LTR	DESCRIPTION	DATE	APPROVED
	✓	F	REDRAWN C83-769	4-4-84	[illegible]/DH

1-332056-0

THIS DRAWING IS UNPUBLISHED. RELEASED FOR PUBLICATION APRIL 4, 1984.
© COPYRIGHT 1965 BY AMP INCORPORATED, HARRISBURG, PA. ALL INTERNATIONAL RIGHTS RESERVED. AMP PRODUCTS MAY BE COVERED BY U.S. AND FOREIGN PATENTS AND/OR PATENTS PENDING.

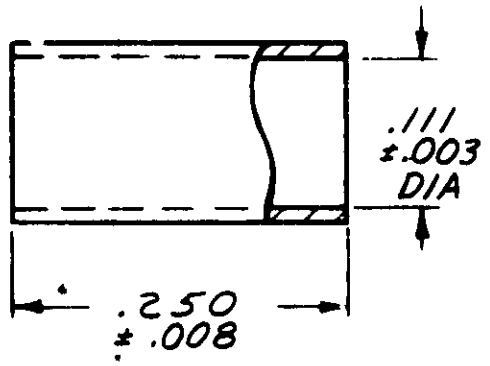

1 COPPER PER ASTM-B-152.

2 TIN PL PER MIL-T-10727

PART NO

UNLESS OTHERWISE SPECIFIED DIMENSIONS ARE IN INCHES. TOLERANCES ON: DECIMALS ± ___ ANGLES ± ___

MATERIAL 1

FINISH 2

CONTRACT NO

DR [signature] 4-4-84

CHK [signature] 4/6/84

APPD [signature] 4/6/84

APPD [signature] 4/6/84

DSGN APPD

OTHER APPD

AMP | AMP INCORPORATED Harrisburg, Pa. 17105

NAME FERRULE

SIZE	FSCM NO	DRAWING NO
A	00779	1-332056-0

SCALE NTS | SHEET ___

AMP 1469-32 REV 2-81

CUSTOMER DRAWING